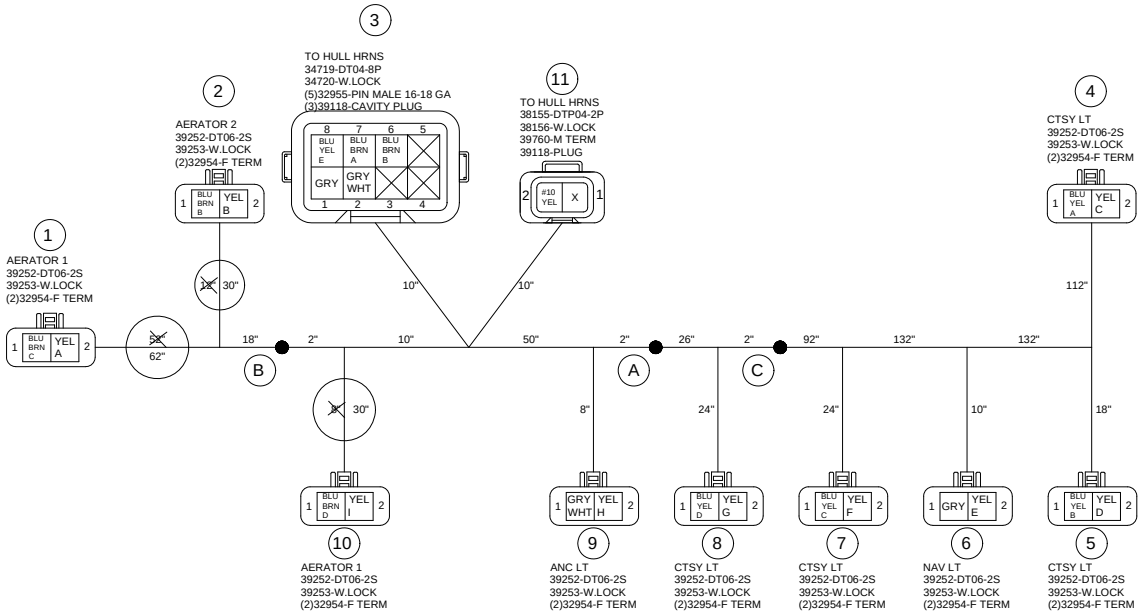

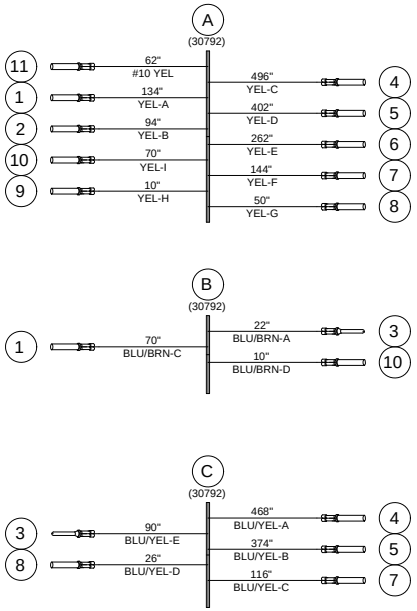

MATERIAL/COLOR		NOTES:				CUSTOMER:	SUNDANCE
THICKNESS						PART:	HRNS DECK
FINISH			A	P4911	RELEASE TO QUOTE/PROTO	7/11/12	BW
SCREEN COLOR			REV.	ECR/ECN #	DESCRIPTION	DATE	BY
SILK SCREEN #							
HARNESS BOARD							
WIRE HARNESS							
MOLD#/FIXTURE#							

IMP Holdings, LLC
409 GROWTH PARKWAY, ANGOLA IN 46703
COPYRIGHT OF IMP Holdings, LLC.
THIS DRAWING IS THE PROPERTY OF IMP HOLDINGS, LLC. AND IS TO BE USED EXCLUSIVELY FOR THE MANUFACTURE OR INSTALLATION OF THE PRODUCT SHOWN THEREON, BY WRITTEN CONSENT ONLY.

CHECKED BY:	DRAWN BY: B.WHITE	YEAR: 2013	CAD DWG: SU65860W
CHECKED BY:	DATE: 7/11/12	PART NUMBER: 65860	REV: A
ENG MGR:	SHEET: 1 OF 1		

MATERIAL/COLOR		NOTES:				CUSTOMER:	SUNDANCE
THICKNESS						PART:	HRNS DECK
FINISH			A	P4911	RELEASE TO QUOTE/PROTO	7/11/12	BW
SCREEN COLOR			REV.	ECR/ECN #	DESCRIPTION	DATE	BY
SILK SCREEN #							
HARNESS BOARD							
WIRE HARNESS							
MOLD#/FIXTURE#							

IMP Holdings, LLC
409 GROWTH PARKWAY, ANGOLA IN 46703
COPYRIGHT OF IMP Holdings, LLC.
THIS DRAWING IS THE PROPERTY OF IMP HOLDINGS, LLC. AND IS TO BE USED EXCLUSIVELY FOR THE MANUFACTURE OR INSTALLATION OF THE PRODUCT SHOWN THEREON, BY WRITTEN CONSENT ONLY.

CHECKED BY:	DRAWN BY: B.WHITE	YEAR: 2013	CAD DWG: SU65860W
CHECKED BY:	DATE: 7/11/12	PART NUMBER: 65860	REV: A
ENG MGR:	SHEET: 1 OF 1		