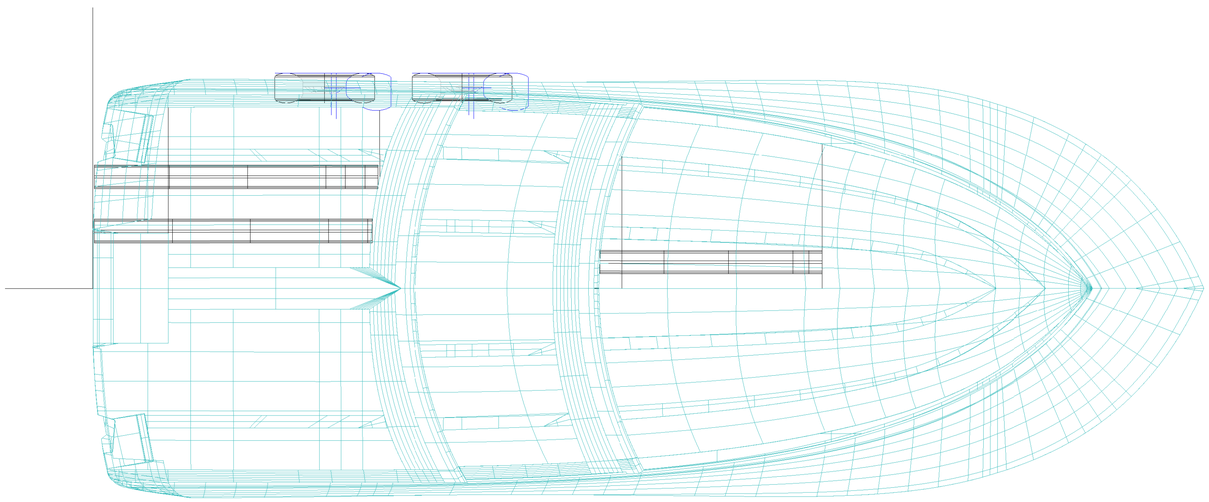

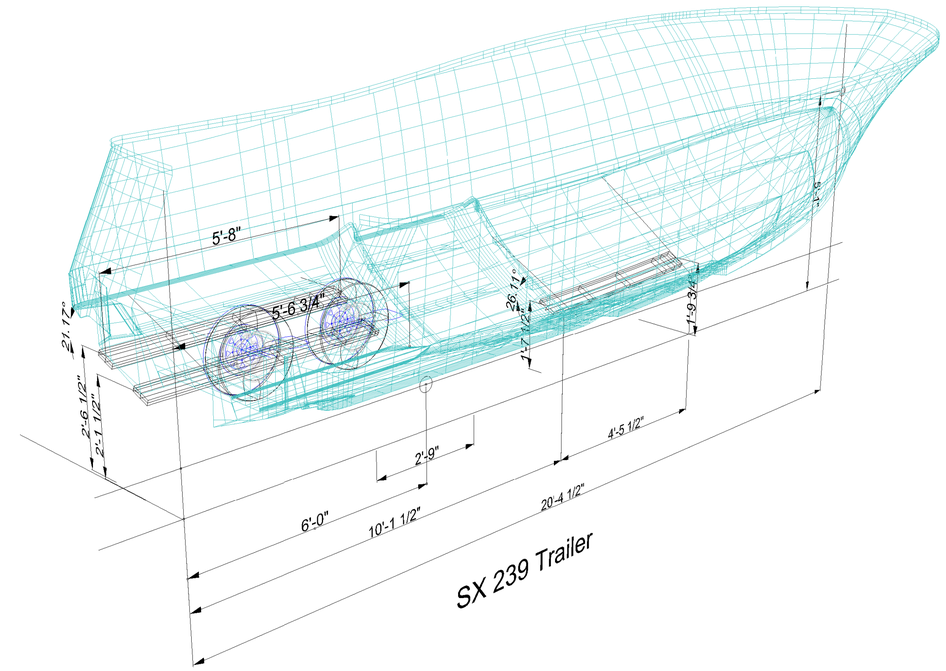


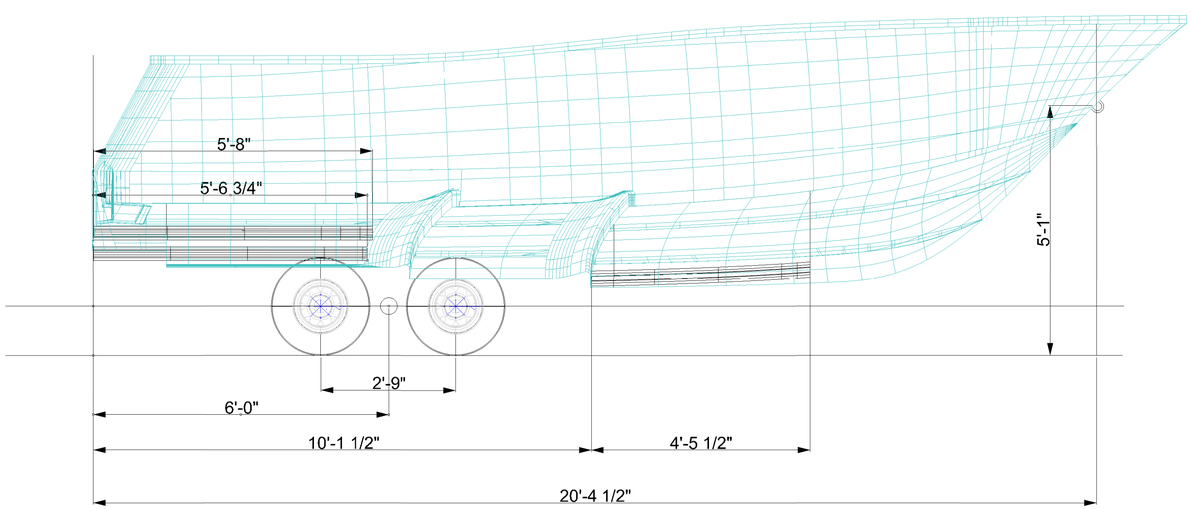

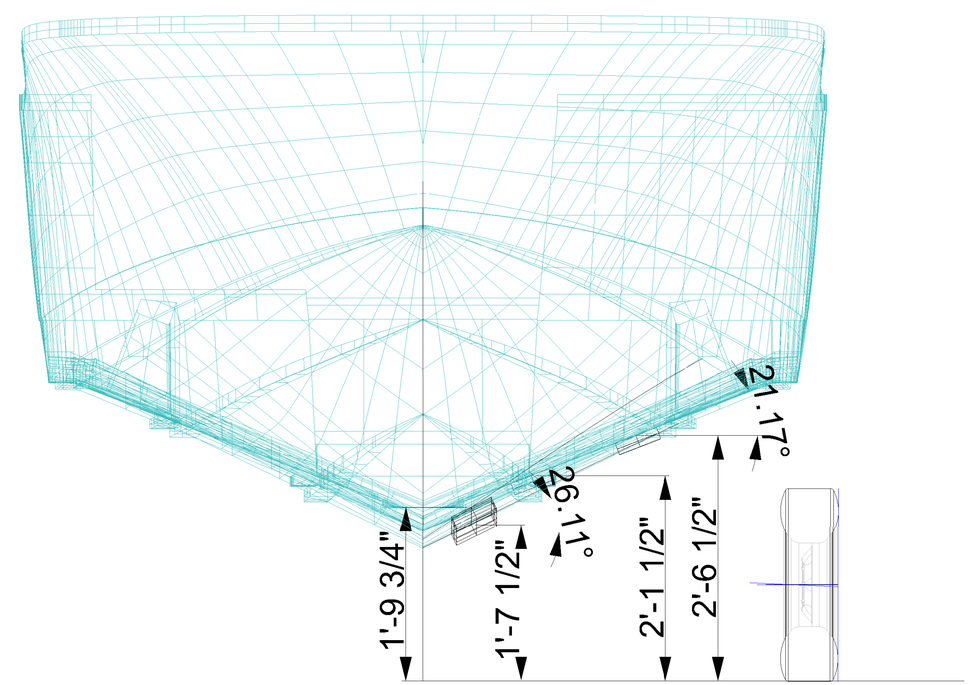
SX 239 Trailer